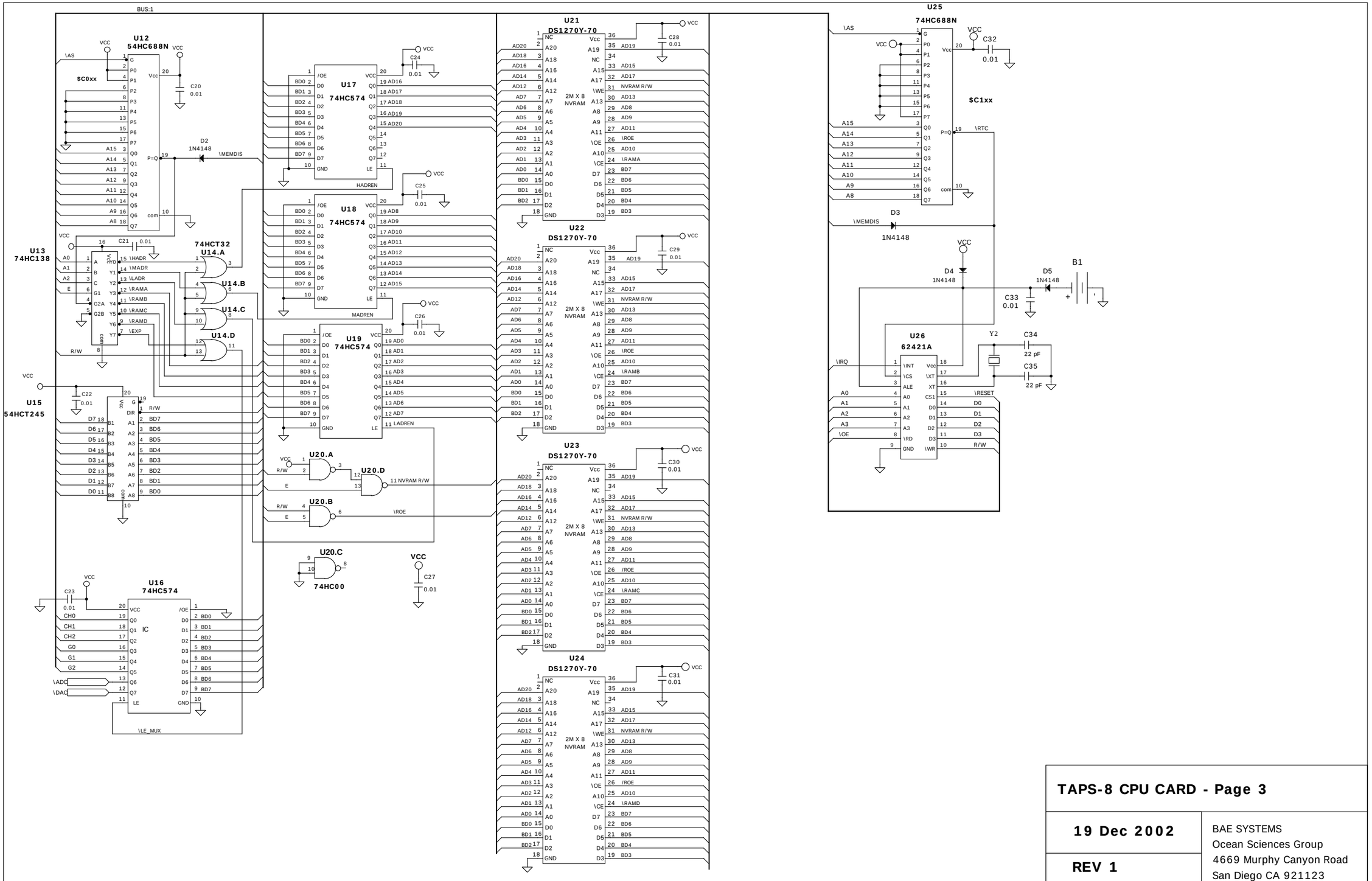

TAPS-8 CPU CARD - Page 3

19 Dec 2002

REV 1

BAE SYSTEMS
Ocean Sciences Group
4669 Murphy Canyon Road
San Diego CA 921123

(858) 268-9777