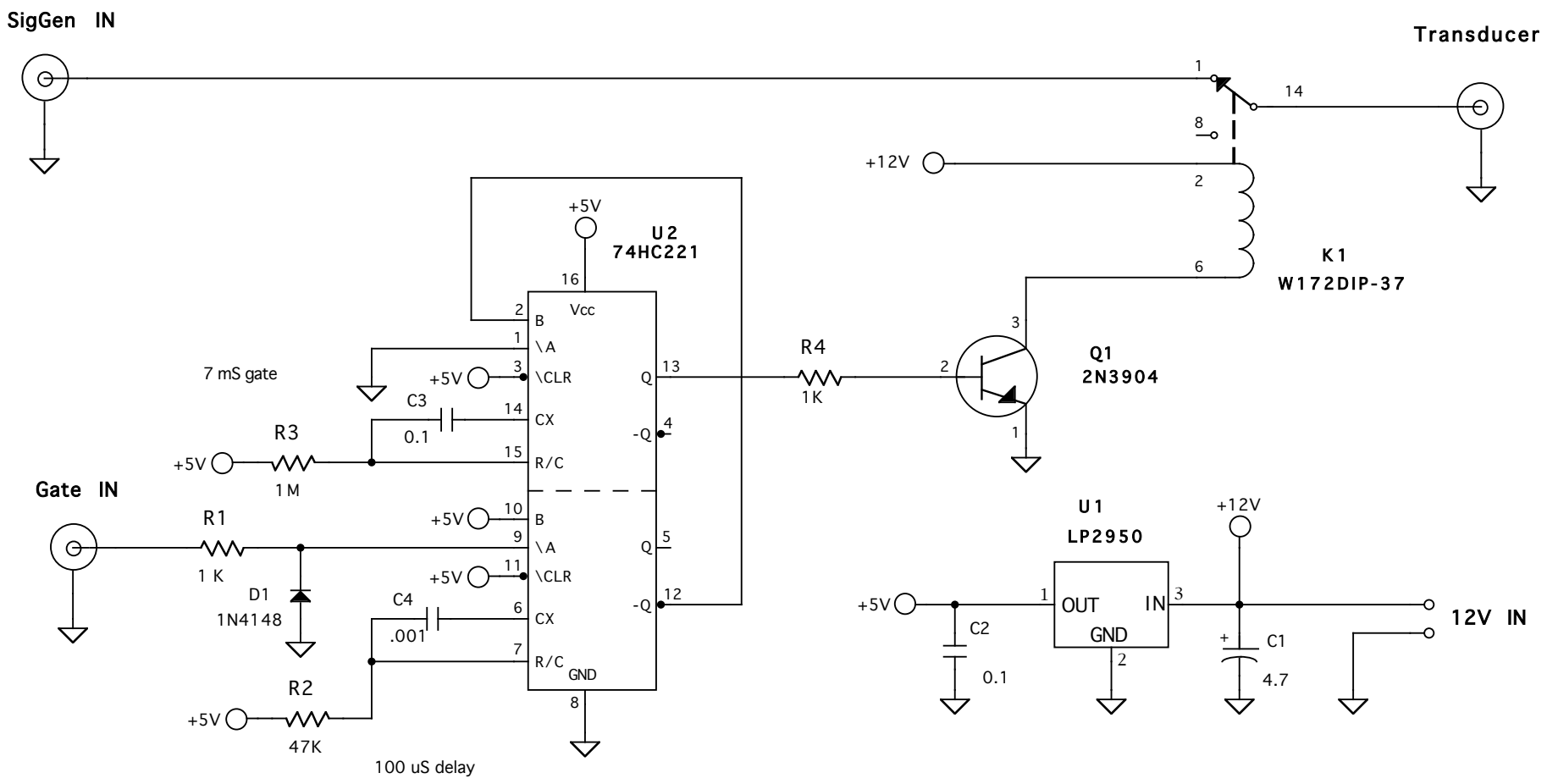

RECIPROCITY SETUP

7 MAY 2007