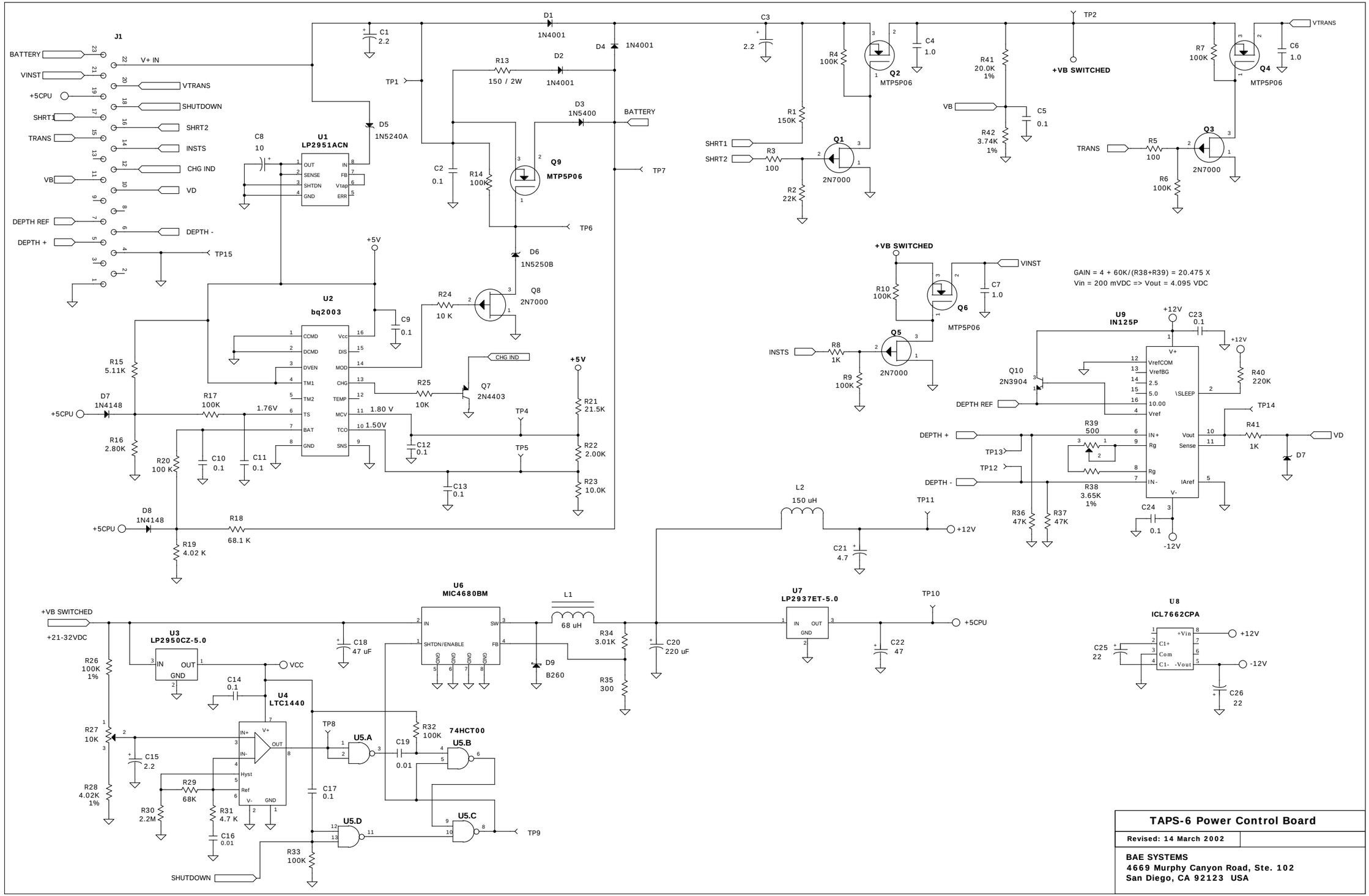

TAPS-6 Power Control Board

Revised: 14 March 2002

BAE SYSTEMS
4669 Murphy Canyon Road, Ste. 102
San Diego, CA 92123 USA