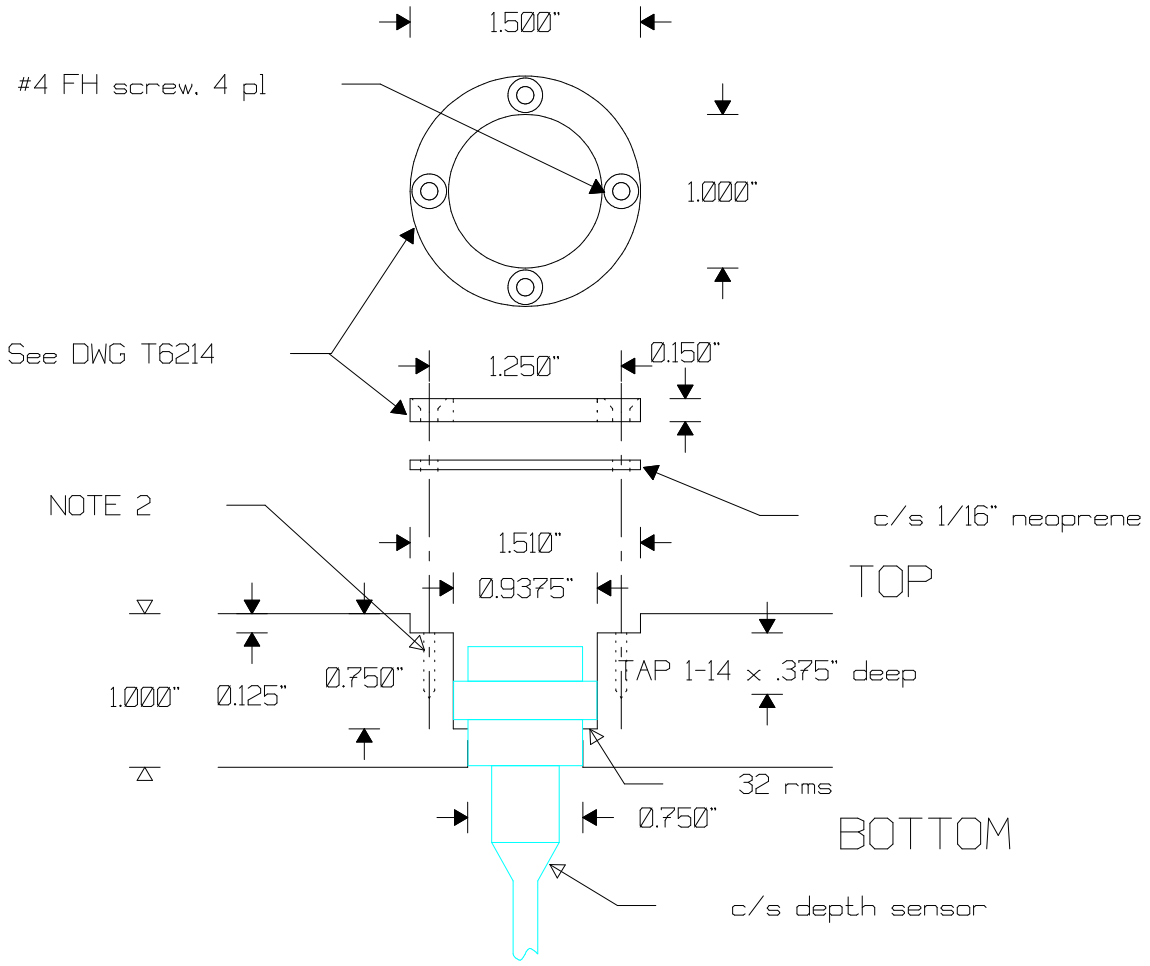

NOTES:
1. detail for DWG T6114
2. D&T 4-40 x 3/8" deep, 4 pl on 1.25" BC
3.
4.
5.

Pressure sensor detail
TAPS 6 endcap

DWG: T6114P
Date: 970822
Rev: 1.01

C:\General Cadd 3\DRAWINGS\NewTAPS\T6114P.gxd -- 10/13/2009 -- 03:00 PM -- Scale 1 : 1.250