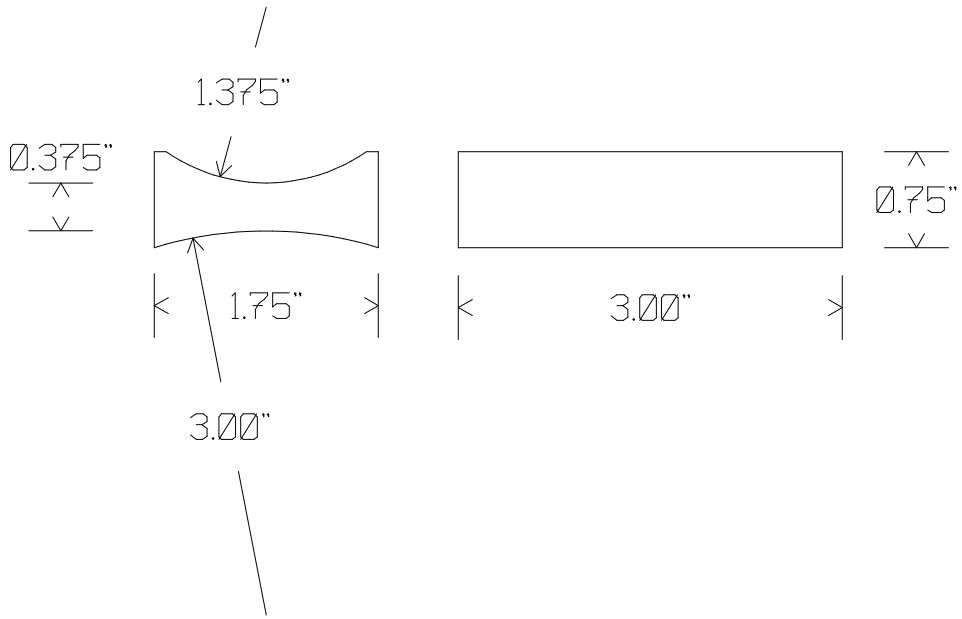

NOTES:
1. Mat'l: grey PVC
2. Remove all toolmarks
3. Round all edges

TAPS-6 WetStar Mount

DWG: T7002
Date: 020613
Rev: 0